Work Order ID 70013

Wednesday, May 25, 2011 12:02:42 PM

Item ID: D3016-041 **Accept** **Setup Start**

Revision ID: **Stop**

Item Name: Seat Frame Assembly

Start Date: 5/25/2011 **Start Qty:** 1.00 **Cust Item ID:**

Required Date: 6/10/2011 **Req'd Qty:** 1.00 **Customer:**

Reference:

Approvals: **Process Plan:** CL **Date:** 11/05/25 **Tooling:** _____ **Date:** _____ **Run Start**

QC: _____ **Date:** _____ **SPC (Y/N):** _____ **Date:** _____ **Stop**

Sequence ID/ Work Center ID	Operation Description	Set Up/ Run Hours	Tool ID	Tool #	Plan Code	Accept Qty	Reject Qty	Reject Number	Insp. Stamp

Draw Nbr	Revision Nbr
D3016	RevA / DEO A-1

100 Weld per dwg A/R 4130 rod Batch: M100075 0.00

Large Fab

Large Fab

Large Fab

Memo 0.00

1-Cut all tubes as per Dwg D3016

2-Deburr

3-Assemble tubes, fittings and weld as per Dwg D3016 using welding jig DT8597

4-Transfer drill holes from D3017-041 and D3021-041 in seat frame D3016-041

5- Assemble brackets and gusset per dwg and weld

EL 11-6-8

110 QC9- Inspect visual per QSI004- Fusion Welds 0.00

QC

Quality Control

Memo 0.00

1 Q BE 11/06/13

Dart Aerospace Ltd

W/O:		WORK ORDER CHANGES					
DATE	STEP	PROCEDURE CHANGE	By	Date	Qty	Approval Chief Eng / Prod Mgr	Approval QC Inspector

Part No: _____ **PAR #:** _____ **Fault Category:** _____ **NCR:** Yes No **DQA:** _____ **Date:** _____

Resolution: _____ **Disposition:** _____ **QA: N/C Closed:** _____ **Date:** _____

NCR:		WORK ORDER NON-CONFORMANCE (NCR)						
DATE	STEP	Description of NC Section A	Corrective Action Section B			Verification Section C	Approval Chief Eng	Approval QC Inspector
			Initial Chief Eng	Action Description Chief Eng	Sign & Date			

NOTE: Date & initial all entries

H:\fFORMS\Quality Assurance\approved QA\NCRWO RevE

Work Order ID 70013

Wednesday, May 25, 2011 12:02:42 PM

Item ID: D3016-041 **Accept** **Setup Start** **Stop**

Revision ID:

Item Name: Seat Frame Assembly

Start Date: 5/25/2011 **Start Qty:** 1.00 **Cust Item ID:**

Required Date: 6/10/2011 **Req'd Qty:** 1.00 **Customer:**

Reference:

Run Start **Stop**

Approvals: **Process Plan:** _____ **Date:** _____ **Tooling:** _____ **Date:** _____

QC: _____ **Date:** _____ **SPC (Y/N):** _____ **Date:** _____

Sequence ID/ Work Center ID	Operation Description	Set Up/ Run Hours	Tool ID	Tool #	Plan Code	Accept Qty	Reject Qty	Reject Number	Insp. Stamp
120	QC5- Inspect part completeness to step on W/O	0.00							
QC	Memo	0.00							
Quality Control									
130	Grey Sandtex(Ref:4.3.5.6) per QSI005 4.3	0.00							
Powdercoat	Memo	0.00							
Powder Coating	Install paint screws on fitting ends START TIME: 8:30 OVEN TEMPERATURE: 9:00 FINISH TIME: 3:00								
140	QC3- Inspect Part Finish	0.00							
QC	Memo	0.00							
Quality Control									

5 11/06/13

(XC) set

M1115128

11/06/13

1 BR 11-6-13

Dart Aerospace Ltd

W/O:		WORK ORDER CHANGES					
DATE	STEP	PROCEDURE CHANGE	By	Date	Qty	Approval Chief Eng / Prod Mgr	Approval QC Inspector

Part No: _____ **PAR #:** _____ **Fault Category:** _____ **NCR:** Yes No **DQA:** _____ **Date:** _____

Resolution: _____ **Disposition:** _____ **QA: N/C Closed:** _____ **Date:** _____

NCR:		WORK ORDER NON-CONFORMANCE (NCR)						
DATE	STEP	Description of NC Section A	Corrective Action Section B			Verification Section C	Approval Chief Eng	Approval QC Inspector
			Initial Chief Eng	Action Description Chief Eng	Sign & Date			

NOTE: Date & initial all entries

H:\FORMS\Quality Assurance\approved QA\NCRWO RevE

Work Order ID 70013

Wednesday, May 25, 2011 12:02:42 PM

Item ID: D3016-041 **Accept** **Setup Start**

Revision ID: **Stop**

Item Name: Seat Frame Assembly

Start Date: 5/25/2011 **Start Qty:** 1.00 **Cust Item ID:**

Required Date: 6/10/2011 **Req'd Qty:** 1.00 **Customer:**

Reference:

Run Start

Approvals: **Process Plan:** _____ **Date:** _____ **Tooling:** _____ **Date:** _____

Stop

QC: _____ **Date:** _____ **SPC (Y/N):** _____ **Date:** _____

Sequence ID/ Work Center ID	Operation Description	Set Up/ Run Hours	Tool ID	Tool #	Plan Code	Accept Qty	Reject Qty	Reject Number	Insp. Stamp
150	Identify as per dwg & Stock Location: G-A	0.00							
Packaging	**Memo** w/o 70005	0.00							
Packaging									
160	QC21- Final Inspection - Work Order Release	0.00							
QC	**Memo**	0.00							
Quality Control									

11/06/13 ①

11/6/14

MF 11-06-14

Dart Aerospace Ltd

W/O:		WORK ORDER CHANGES					
DATE	STEP	PROCEDURE CHANGE	By	Date	Qty	Approval Chief Eng / Prod Mgr	Approval QC Inspector

Part No: _____ **PAR #:** _____ **Fault Category:** _____ **NCR:** Yes No **DQA:** _____ **Date:** _____

Resolution: _____ **Disposition:** _____ **QA: N/C Closed:** _____ **Date:** _____

NCR:		WORK ORDER NON-CONFORMANCE (NCR)						
DATE	STEP	Description of NC Section A	Corrective Action Section B			Verification Section C	Approval Chief Eng	Approval QC Inspector
			Initial Chief Eng	Action Description Chief Eng	Sign & Date			

NOTE: Date & initial all entries

H:\FORMS\Quality Assurance\approved QA\NCRWO RevE

Picklist Print

Wednesday, May 25, 2011 12:02:39 PM

2

Work Order ID: 70013

Parent Item: D3016-041

Parent Item Name: Seat Frame Assembly

Start Date: 5/25/2011 **Required Date:** 6/10/2011

Start Qty: 1.00 **Required Qty:** 1.00

Comments: IPP A□01.09.19□New issue□EC□IPP RevB: as per revB DD verified by:JLM

Component Item ID/ Item Name	Replacement Item ID	Mfg/ Purch	Bin Item	Primary Location	Last Location	Route Seq ID	Unit of Measure	Qty on Hand	Qty per Kit	Total Qty	Qty Issued	Date Issued	Status
M4130NT0.750W.049		Purchased	No			100	f	48.0990	4.3	4.526316	EL	11-6-8	
4130 RD Tube .750 x.049W													
				Location		**Loc Qty**		**Loc Code**					
				MAT033		48.099							
					110740	1.129							
					117691	46.97				4.52			
M4130NT0.500W.049		Purchased	No			100	f	54.4900	4.3	4.526316	EL	11-6-8	
4130 RD Tube .500 x.049W													
				Location		**Loc Qty**		**Loc Code**					
				MAT032		54.49							
					110740	54.49				4.52			
M4130NT1.000W.120		Purchased	No			100	f	27.6400	1.5	1.578947	EL	11-6-8	
4130 RD Tube 1.00 x .120wall													
				Location		**Loc Qty**		**Loc Code**					
				MAT033		27.64							
					117372	2.64				1.32			
					117656	25							
D3016-17		Manufactured	No			100	Each	4.0000	2	2	EL	11-6-10	
Gusset													
				Location		**Loc Qty**		**Loc Code**					
				WA019		4							
					68736	4				2			

Dart Aerospace Ltd

W/O:		WORK ORDER CHANGES					
DATE	STEP	PROCEDURE CHANGE	By	Date	Qty	Approval Chief Eng / Prod Mgr	Approval QC Inspector

Part No: _____ **PAR #:** _____ **Fault Category:** _____ **NCR:** Yes No **DQA:** _____ **Date:** _____

Resolution: _____ **Disposition:** _____ **QA: N/C Closed:** _____ **Date:** _____

NCR:		WORK ORDER NON-CONFORMANCE (NCR)						
DATE	STEP	Description of NC Section A	Corrective Action Section B			Verification Section C	Approval Chief Eng	Approval QC Inspector
			Initial Chief Eng	Action Description Chief Eng	Sign & Date			

NOTE: Date & initial all entries

H:\FORMS\Quality Assurance\approved QA\NCRWO RevE

Picklist Print

Wednesday, May 25, 2011 12:02:39 PM

Work Order ID: 70013

Parent Item: D3016-041

Parent Item Name: Seat Frame Assembly

Start Date: 5/25/2011 **Required Date:** 6/10/2011

Start Qty: 1.00 **Required Qty:** 1.00

D3016-13	Manufactured	No	100	Each	2.0000	2	2	
Bracket								EL 11-6-10

Location	Loc Qty	Loc Code
WA019	2	
44778	2	

D3016-15	Manufactured	No	100	Each	6.0000	2	2	
Gusset								EL 11-6-10

Location	Loc Qty	Loc Code
WA019	6	
68735	6	

D3020-1	Manufactured	No	100	Each	9.0000	4	4	
Fitting								EL 11-6-8

Location	Loc Qty	Loc Code
WA	9	
36713	9	

4

Dart Aerospace Ltd

W/O:		WORK ORDER CHANGES					
DATE	STEP	PROCEDURE CHANGE	By	Date	Qty	Approval Chief Eng / Prod Mgr	Approval QC Inspector

Part No: _____ **PAR #:** _____ **Fault Category:** _____ **NCR:** Yes No **DQA:** _____ **Date:** _____

Resolution: _____ **Disposition:** _____ **QA: N/C Closed:** _____ **Date:** _____

NCR:		WORK ORDER NON-CONFORMANCE (NCR)						
DATE	STEP	Description of NC Section A	Corrective Action Section B			Verification Section C	Approval Chief Eng	Approval QC Inspector
			Initial Chief Eng	Action Description Chief Eng	Sign & Date			

NOTE: Date & initial all entries

H:\fFORMS\Quality Assurance\approved QA\NCRWO RevE

DART

DESIGN	DRAWN BY	DART AEROSPACE LTD HAWKESBURY, ONTARIO, CANADA	
CHECKED	APPROVED	DRAWING NO. D3016	REV. A SHEET 1 OF 3
DATE 01.05.18		TITLE SEAT FRAME ASSEMBLY	SCALE NTS
A	01.05.18	NEW ISSUE	

QTY	PART NUMBER	DESCRIPTION	MATERIAL
X	D3016-041	SEAT FRAME ASSEMBLY	N/A
1	D3016-1	TUBE	AISI 4130N TUBE, Ø0.75 DIA x 0.049 WALL (M4130N-T0750W049)
2	D3016-3	TUBE	AISI 4130N TUBE, Ø0.75 DIA x 0.049 WALL (M4130N-T0750W049)
1	D3016-5	TUBE	AISI 4130N TUBE, Ø0.50 DIA x 0.049 WALL (M4130N-T0500W049)
2	D3016-7	TUBE	AISI 4130N TUBE, Ø0.50 DIA x 0.049 WALL (M4130N-T0500W049)
1	D3016-9	SADDLE	AISI 4130N TUBE, Ø1.00 DIA x 0.120 WALL (M4130N-T1000W120)
1	D3016-11	SADDLE	AISI 4130N TUBE, Ø1.00 DIA x 0.120 WALL (M4130N-T1000W120)
1	D3016-13	BRACKET	AISI 4130N SHEET, 18 GAUGE (M4130N-S049)
1	D3016-15	GUSSET	AISI 4130N SHEET, 18 GAUGE (M4130N-S049)
1	D3016-17	GUSSET	AISI 4130N SHEET, 18 GAUGE (M4130N-S049)
2	D3020-1	FITTING	N/A

NOTES

1) WELD PER DART QSI 004
2) ON SHEET METAL PARTS, BREAK ALL UNMARKED CORNERS 0.020-0.040
3) FINISH: POWDER COAT GREY SANDTEX (REF. 4.3.5.6) PER DART QSI 005 4.3
4) ALL DIMENSIONS ARE IN INCHES
5) TOLERANCES ARE PER DART QSI 018 UNLESS OTHERWISE NOTED

CL 11/05/25
W/O: 70013

DEO ATTACHED

RELEASED 01.05.30

D3016-041 SEAT FRAME ASSEMBLY

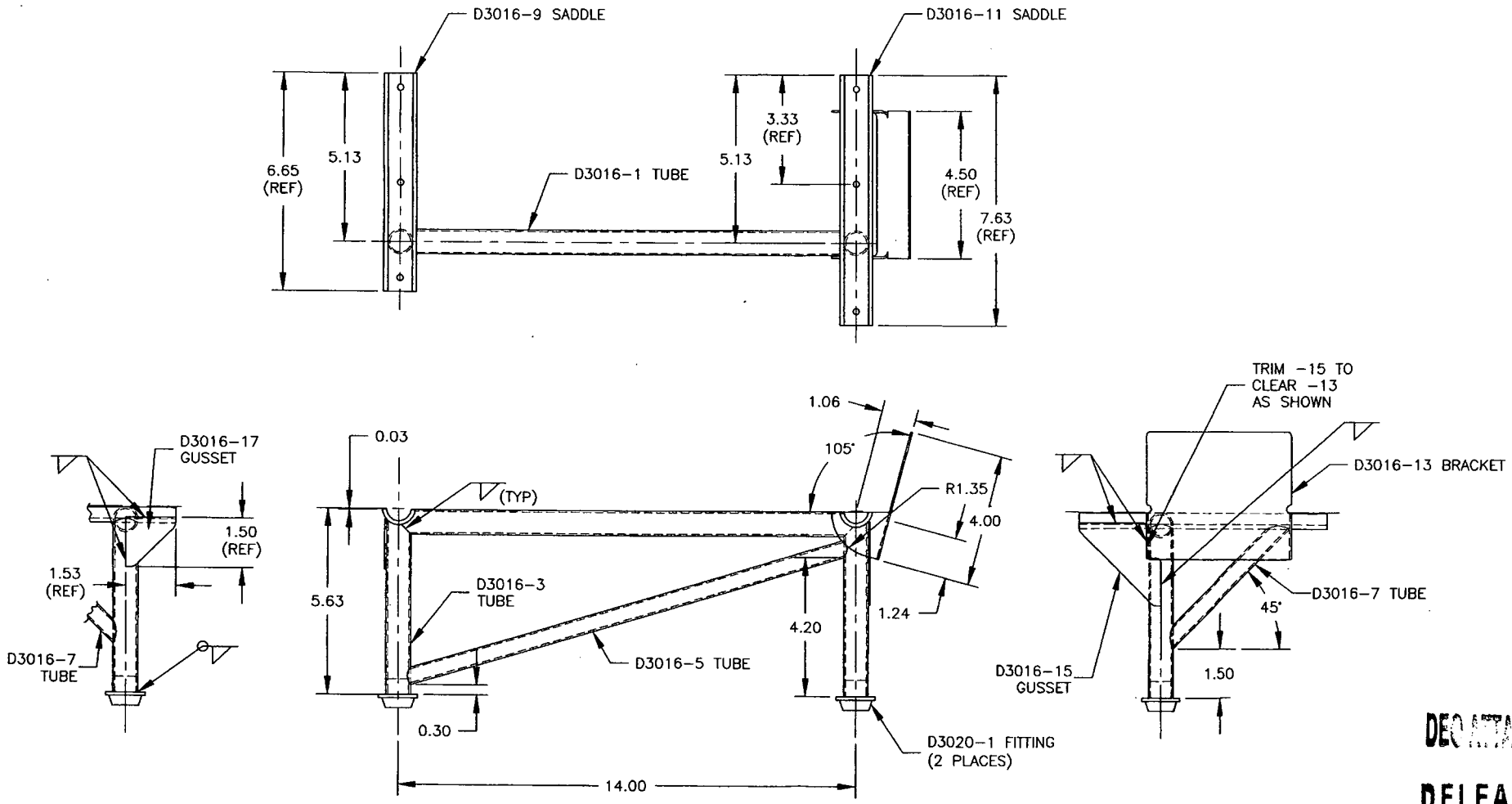

DEC ATTACHED

RELEASED 01.05.30

DESIGN CP	DRAWN BY CP	DART	DART AEROSPACE LTD. HAWKESBURY, ONTARIO, CANADA
CHECKED	APPROVED	DRAWING NO. D3016	REV. A SHEET 2 OF 3
DATE 01.05.18		TITLE SEAT FRAME ASSEMBLY	SCALE 1:3

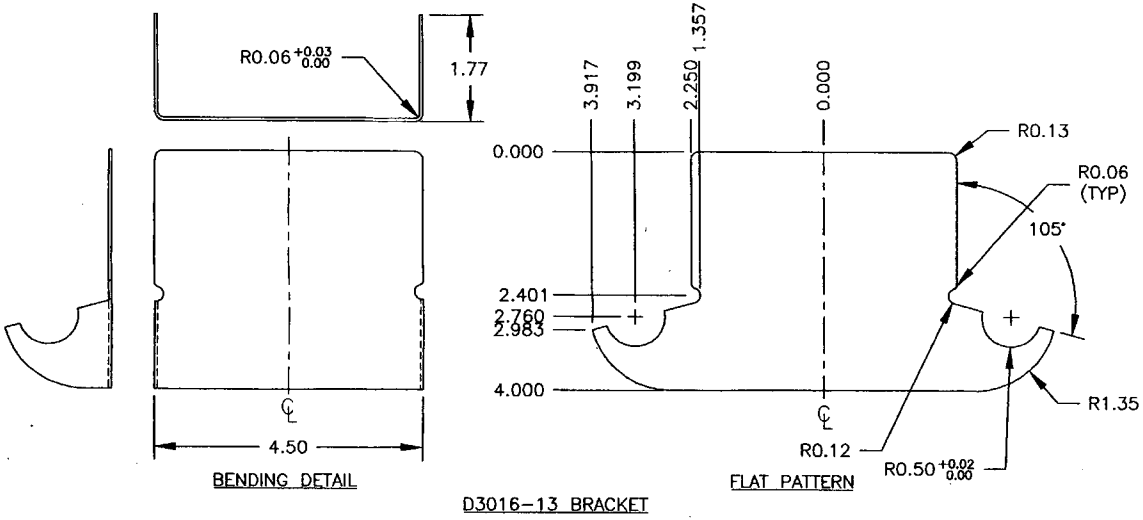

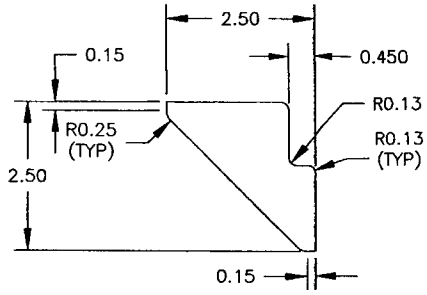

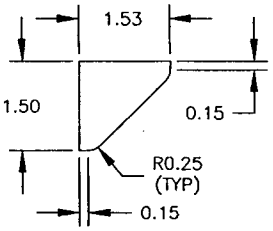

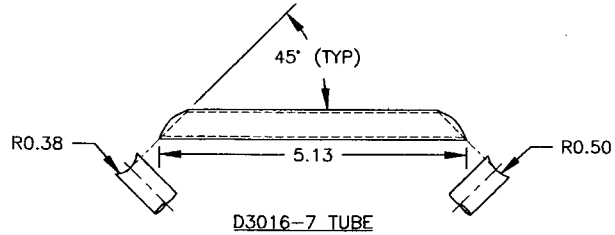

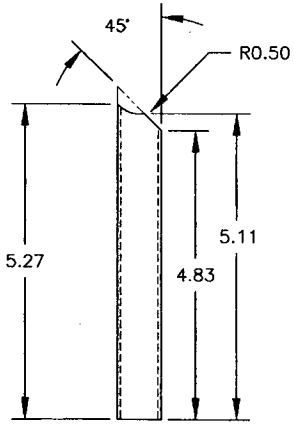

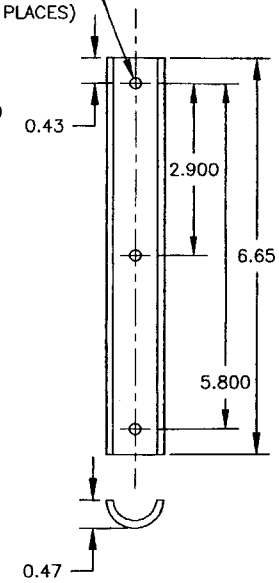

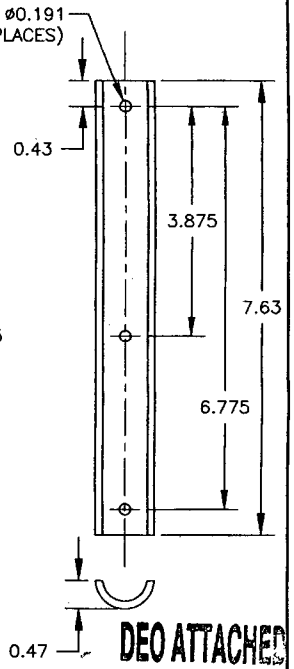

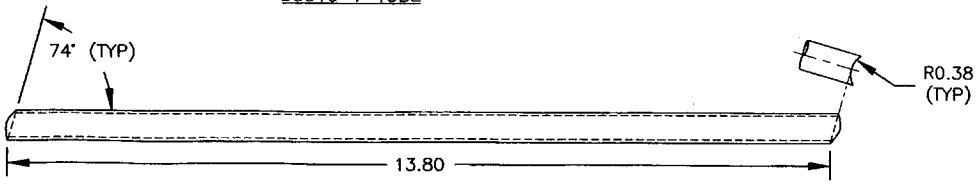

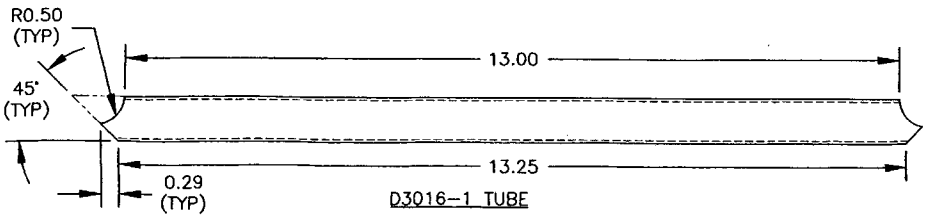

DEO ATTACHED

RELEASED 9.05.30

DESIGN CP	DRAWN BY CP	DART	DART AEROSPACE LTD. HAWKESBURY, ONTARIO, CANADA
CHECKED	APPROVED	DRAWING NO. D3016	REV. A SHEET 3 OF 3
DATE 01.05.18		TITLE SEAT FRAME ASSEMBLY	SCALE 1:2

DRAWING NO.	TITLE	REV. A	DART AEROSPACE LTD ENGINEERING ORDER	D.E.O. NO.	SHEET NO.	SCALE
D3016	SEAT FRAME ASSEMBLY			D3016-A-1	SHEET 1 OF 1	NTS

DRAWN	CHECKED	MFG. APPR.	APPROVED	DE APPR.
DATE 10.01.29	DATE 10.01.29	DATE 10.01.29	DATE 10.01.29	DATE 10.01.29

PURPOSE:
TO REVISE D3016-11 SADDLE'S HOLE SIZES

CHANGE:

DETAIL D3016-11 SADDLE (SHEET 3): Ø0.257 TYP 3 PL WAS Ø0.191 (TYP 3 PLACES) AS SHOWN:

IS:

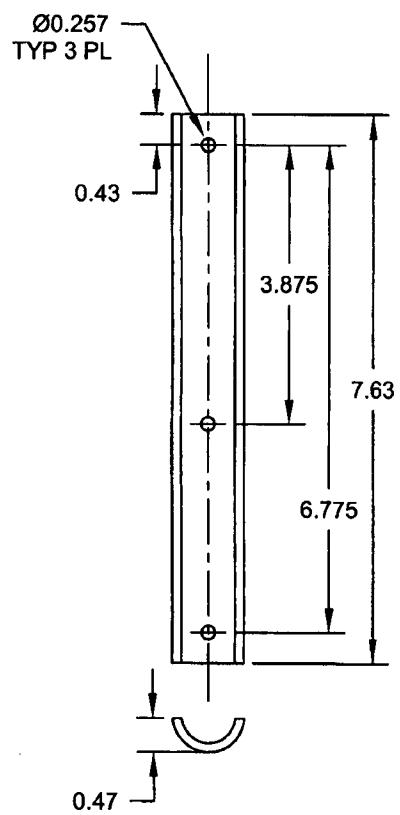

D3016-11 SADDLE

WAS:

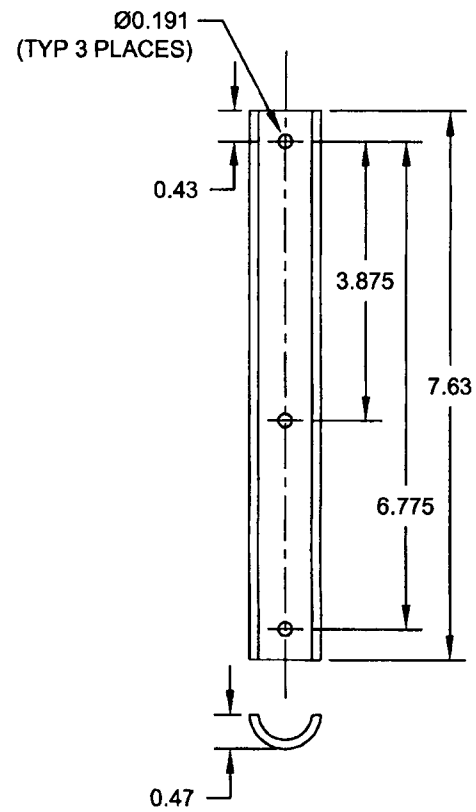

D3016-11 SADDLE